Creative Design of Solar Multi-Function LED Clock

Yan Li
School of Energy Engineering
Yulin University
Yu Lin, China
yezi-0117@163.com

Qin Yao
School of Energy Engineering
Yulin University
Yu Lin, China
281510562@qq.com

Yan Huang
School of Energy Engineering
Yulin University
Yu Lin, China
2762153952@qq.com

***Abstract*—Solar multi-function LED clock is using solar powered. And it can detect temperature and illumination. It uses LED as display, has the characteristics of energy saving and durable use, and uses solar panels to make the whole clock system become green and environmentally. This design takes MCU AT89C51 as the control core, using solar panels to provide energy for the entire system, implements the basic function of the clock with the DS1302 clock chip, completes the check of the temperature and illumination of the multi-function clock by using the DS18B20 temperature sensor and the ON9658 illumination sensor, so that the control module can make timely adjustment and collection. Using LED digital tube as the display module of the clock, the control software is written in C language and simulated by Proteus software, so as to realize the simulation of the multi-function LED clock design of the solar energy. This design firstly summarizes the solar multi-function LED clock, and analyses the characteristics and development trend of the multi-function clock. Secondly, the overall structure design, hardware design and software design are completed according to the design requirements. Last but not least, debugging and simulation are carried out. The simulation results are basically consistent with the theoretical analysis results.**

Keywords—solar power supply system, multi-functional LED clock, temperature sensor, illumination sensor, creative design

I. INTRODUCTION

With technology developing, modern people's life is becoming more and more convenient, and the demand for electricity is also attached great importance [1-2]. However, the global resources are not inexhaustible. Especially with the rising international oil prices, it is increasingly important to find alternative energy sources. Therefore, many scholars have devoted great efforts to study how to convert the solar energy into usable electric energy. At present, most of the clocks only display time and set the alarm function [3-8]. The functions are relatively single, which cannot meet people's needs in many aspects. Moreover, most of the clocks generally use disposable batteries or rechargeable batteries, which are not conducive to energy conservation and emission reduction, and have a certain impact on environmental pollution. The use of disposable batteries is not conducive to environmental protection.

At present, the solar clock used to convert light energy into electrical energy and store it in its own market is generally single function. It has not made any other functions and cannot meet the diverse needs of the market. Therefore, a multi-functional solar clock is needed to increase the function of weather monitoring and lighting on the function of the original clock. And energy saving and lasting, green and environmental protection.

II. OVERALL SCHEME DESIGN

To solve the above technical problems, the schematic block diagram of the design scheme is shown in Figure 1.

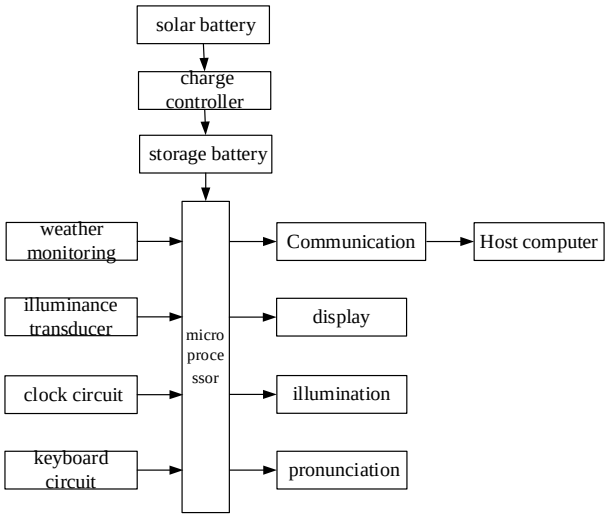

Figure 1. System principle block diagram

  DOI: 10.25236/emcs.2018.169

Multi-functional solar clock is characterized by comprising a clock shell, a control circuit, and a solar power supply device arranged on the upper surface of the clock shell to supply power to the control circuit. The control circuit comprises a microprocessor, and the input end of the microprocessor is connected with a weather monitoring module, an illumination sensor, a clock circuit and a press. The output terminal of the microprocessor is connected with a communication module, a display module, a LED lighting module and a voice module. The output end of the communication module is connected with a host computer, and the solar power supply device comprises a solar battery set and a display module connected in sequence, and the display module is arranged in the inner part of the clock shell.

Battery Clock circuit and display module can realize the basic clock function, and through keyboard circuit and voice module can realize the function of timing broadcast [8-10]. The solar cell set on the top surface of the clock shell converts solar energy into electrical energy, and sends the modulated DC power into the electrical energy storage for energy saving and environmental protection, and the power supply is durable. The temperature, humidity and wind speed are detected in real time by the weather monitoring module, and sent to the microprocessor, and the temperature, humidity and wind speed are controlled by the microcontroller. The information is displayed on the display module, and the temperature, humidity and wind speed information are sent to the host computer through the communication module, which is suitable for outdoor use. The operation is simple and the use effect is good. The illumination sensor real-time collects light intensity parameters and sends it to the microcontroller, so as to adjust the intensity of LED block in real time, and suitable for outdoor use.

III. Hardware Circuit Design

Power module to provide a steady stream of electricity for the whole control system, first consider the various modules of the whole system needed to power [11-12]: STM32 MCU power supply voltage is + 5 V, DS3231 chip is + 3.3 V, AT24C32 memory chips of the power supply voltage is + 5 V, stepping motor drive power supply voltage is + 5 V, because the entire system test was done in the laboratory, the scene only 220 V alternating current (ac), so the first thing needs to be 220 V ac voltage into a dc voltage, and then to convert dc voltage to the voltage required by each module. For this purpose, the 220V voltage output terminal at the test site is connected to a 220V to 24V AC-DC module, which is then converted into the required power supply voltage for each module. According to the voltage requirements of each module of the whole system, F2405s-2WR2 (24V to 5V) and AMS1117 (+5V to + 3.3v) power module are selected for voltage conversion.

The schematic diagram of the hardware design circuit is shown in Figure 2.

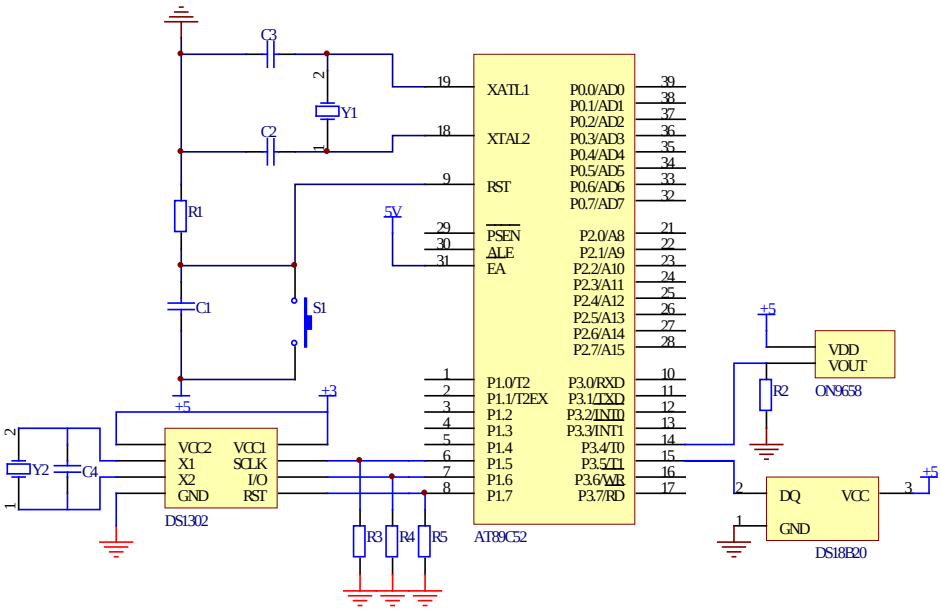

Figure 2. Schematic diagram of hardware circuit

As shown in Figure 2, this design uses microprocessor including chip AT89C52.The clock circuit includes the chip DS1302, the RST pin, the SCLK pin and the I/O pin of the chip DS1302 are respectively connected with the P1.5 pins, P1.6 pins and P1.7 pins of the chip AT89C52, and the VCC1 pin and the DS1302 pin of the chip DS1302 are connected with the power supply terminal. The illumination sensor includes chip ON9658, the VOUT pin of chip ON9658 is connected with the P3.4 pin of chip AT89C52, and the VDD pin of chip ON9658 is connected with the 5V power supply. Weather monitoring module includes temperature sensor, humidity sensor and wind speed sensor. The temperature sensor includes a chip DS18B20, the DQ pin of the chip DS18B20 is connected with the P3.5 pin of the chip AT89C52.

IV. Simulation Verification

The clock is controlled by the chip DS1302. The simulation circuit diagram is shown in Figure 3.

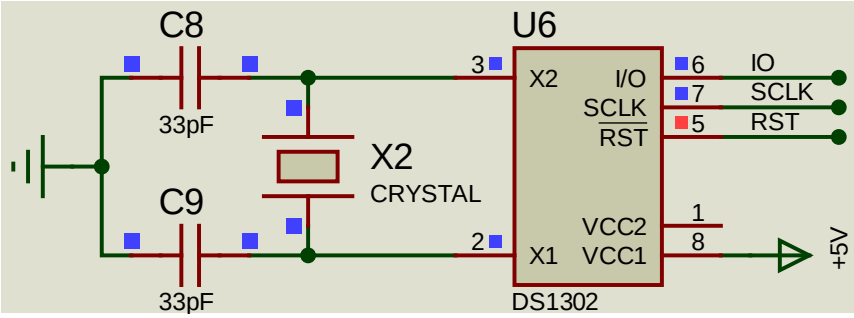

Figure 3. Connection circuit of DS1302 clock chip

When the temperature rises, the red indicator lights up and the green indicator lights out. In the simulation, the temperature is set to 30 ℃, and the results are consistent with the theory.

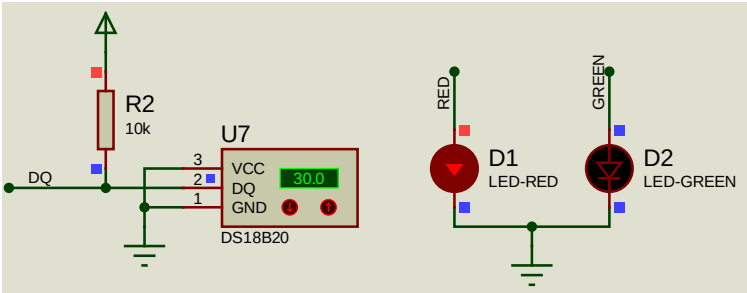

Figure 4. The simulation diagram of the temperature module at 30 ℃

ON9658 has a stable rate of change of photo resistor, which is equivalent to a photo resistor in design, so a photo resistor is directly used in simulation. At the same time, it is also because the simulation uses a photosensitive resistor rather than an ON9658 illumination sensor. The experimental circuit is shown in Figure 5.

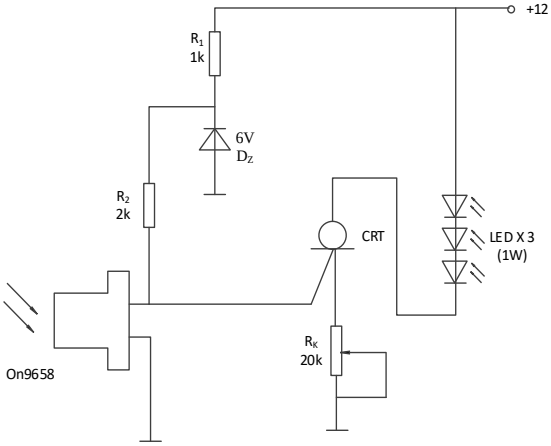

Figure 5. The experimental circuit of ON9658

When the intensity of illumination is weak, the current flow becomes smaller and darkens. The simulation results are as follows:

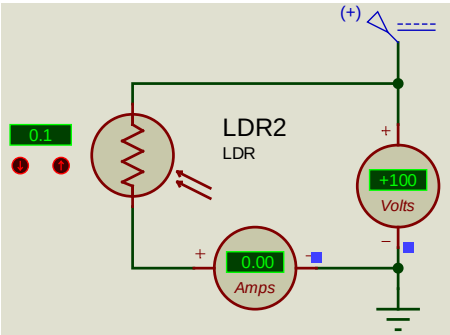

(a) 0.1 Lux illumination

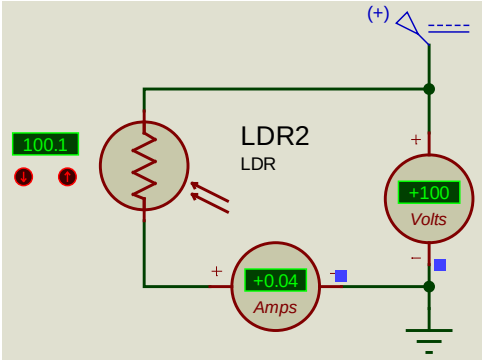

(b) 100.1 Lux illumination

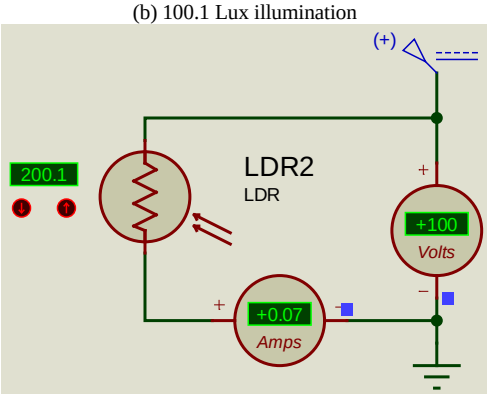

(c) 200.1 Lux illumination

Figure 6 shows the output current of the photo resistor with illumination of 0.1, 100.1, 200.1 Lux illumination.

V. Conclusion

(1) The design has simple structure, reasonable design, easy implementation and operation.

(2) The design uses solar energy to supply power, effectively avoiding waste of disposable batteries, energy saving and environmental protection, and power supply lasting, practical.

(3) The design adds weather monitoring module and LED lighting module, has weather monitoring and lighting function, and adopts illumination sensor to detect the intensity of ambient light. It can adjust the opening, closing and strength of LED lighting module. It has automatic dimming function, suitable for outdoor, simple operation and good use effect.

(4) The design can realize regular broadcasting through keyboard circuit and voice module, not only suitable for use in public, but also easy to operate.

References

[1] Peng wei. Practical training on C language programming of single chip microcomputer [M]. Beijing: electronic industry press, 2009.6.

[2] Wang li-li, song dongping. Design of fancy water lamp based on single chip microcomputer [J]. Guangxi light industry, 2011, (11) :16-19.

[3] Tan haoqiang.C programming (fourth edition) [M]. Beijing: tsinghua university press, 2012.5.

[4] Zhang qi, zhu ningxi. Application system design technology of SCM (third edition) [M]. Beijing: electronic industry press, 2013.7.

[5] Zhang li-ping. Clock Design of LED Pattern Lighting Based on Single Chip Microcomputer[J]. Journal of chifeng college (natural science edition), 2018, 34(10): 4-7.

[6] Wang li ren, Ying-jie Wang, He-jun. Design of digital clock based on AT89C51 single chip[J]. Electronic Design Engineering, 2018, 6(19): 134-137+146.

[7] Liu xiaomeng. Multifunctional digital clock design based on single chip microcomputer [J]. Technology. Economy. Market, 2017 (7) :17-18.

[8] He wenjing. Design of digital clock based on 52 MCU [J]. Electronic circuit design and scheme, 2015 (13) :62.

[9] Zeng li, liu wei, cao long. Design and simulation of digital clock based on AT89C51 single chip microcomputer [J]. Information communication, 2015 (10) :4-5.

[10] Xiong gang, hu zhi, Chen feng, et al. Multi-function clock design based on single chip microcomputer [J]. Electronic design engineering, 2016 (4) :164-166.

[11] Wang duo. Design of digital clock based on SCM [J]. Electronic production, 2016 (23) :14-15.

[12] Yu geng, sun guihuang, xu wenqing. Design and implementation of digital clock system [J]. Journal of taishan university, 2017, 39 (3) :63-69.